FALCON FS290

Reach diagram — Optimized position

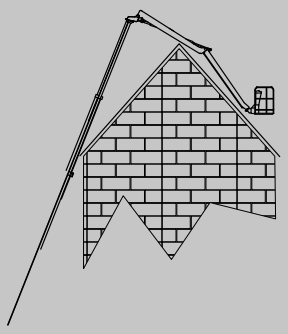

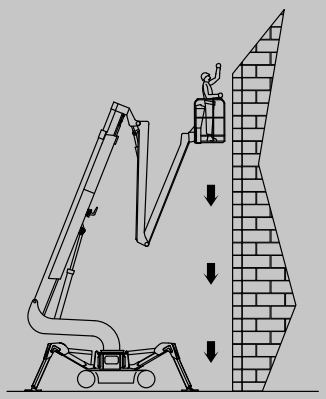

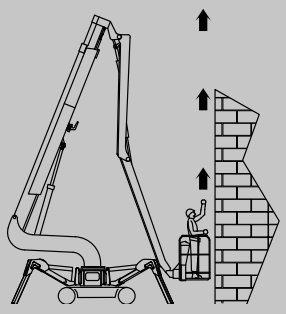

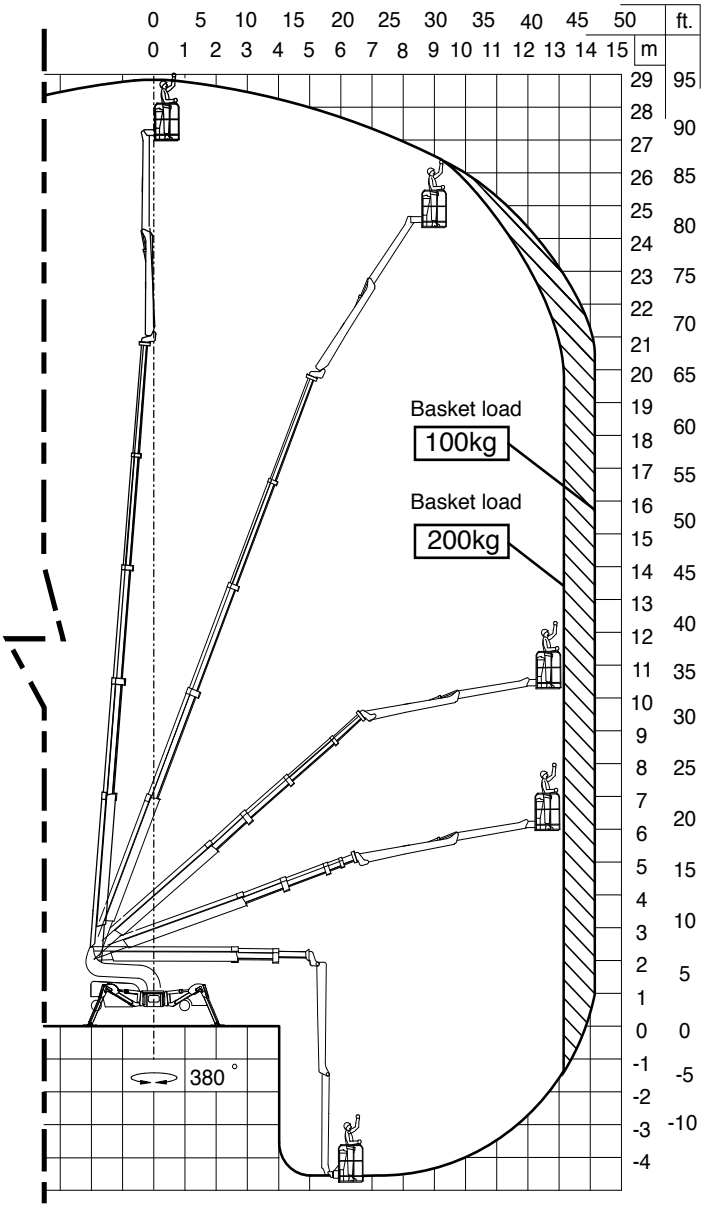

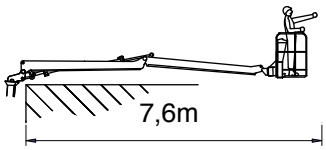

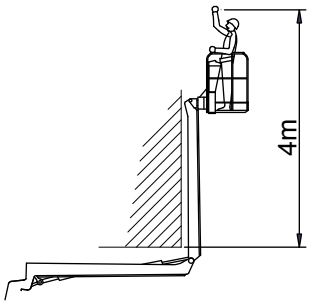

Reach with outriggers in different positions

Standard Measurements in meters **Optimized**

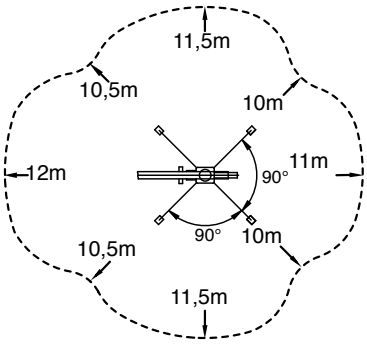

Basket load = 200kg

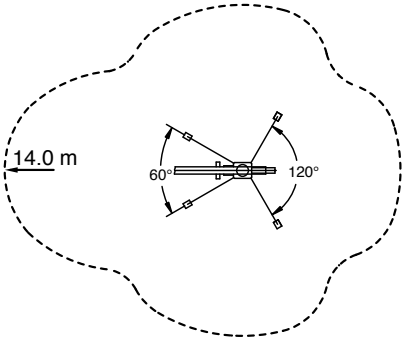

Basket load = 100kg

TCA LIFT A/S
Tolderlundsvej 106
DK • 5000 Odense C
Tel.:+45 66 13 11 00

www.tcalift.com

All measurements are intended as guide. Choise of equipment may change the mentioned measurements

TCA LIFT
Tall Compact Aerial

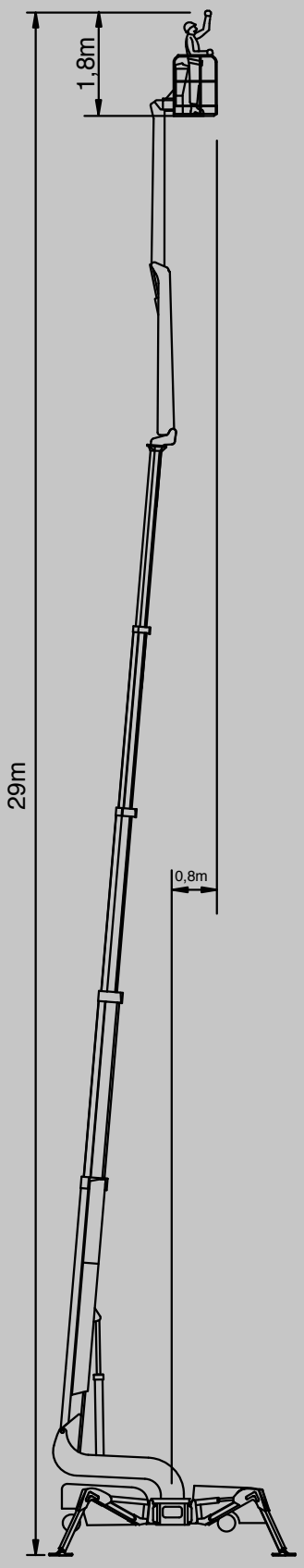

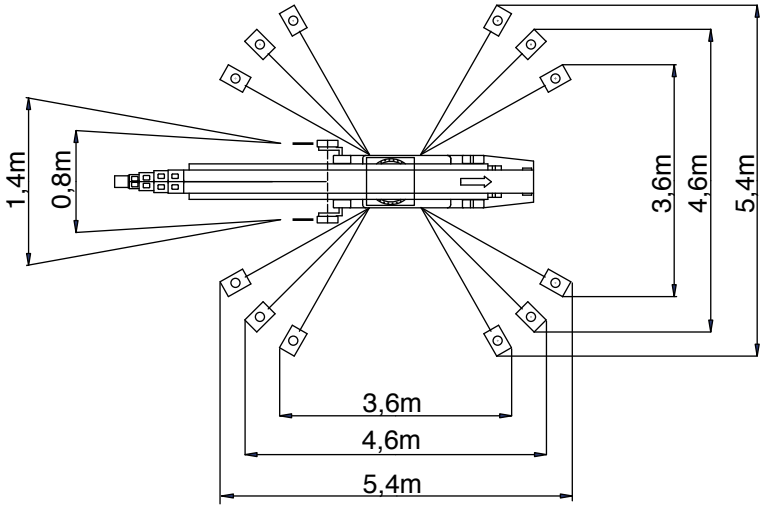

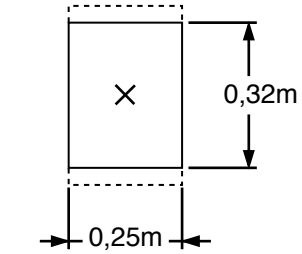

Outrigger plate area
=800cm^2

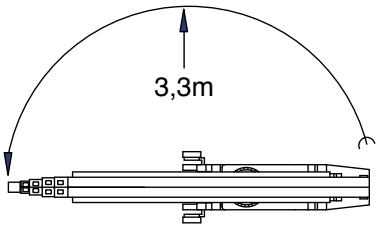

Turning radius

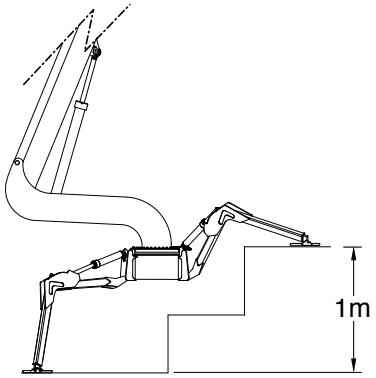

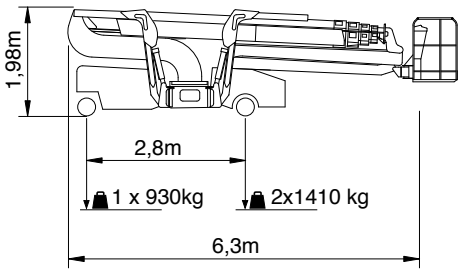

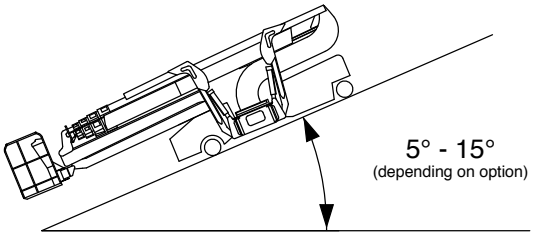

Slope gradeability

Additional info:

Weight and ground pressure:

Weight with standard equipment	3750 kg
Max. ground pressure under 1 wheel	8,2 kg/cm^2
Max. ground pressure under 1 outrigger plate	2,4 kg/cm^2
Front wheel area (depending on wheel type)	1 x ~ 140cm^2
Rear wheel area (depending on wheel type)	2 x ~ 172 cm^2

As all our products are in a constant process of developement we reserve the right to alterations